barbas.

User manual

Evolux 100-45

This product is not suitable for primary heating purposes

CE

Serial number:

Production date:

© Barbas BV

This document or parts thereof may not be reproduced, stored in a retrieval system, or transmitted, in any form or by any means, electronic, mechanical, photocopying, recording, nor otherwise, without the prior written permission of Barbas BV. This document could contain technical inaccuracies or typographical errors. Barbas BV reserves the right to revise this document from time to time in the contents thereof.

Contact information

Barbas BV

Hallenstraat 17, 5531 AB Bladel, The Netherlands

E-mail: info@barbas.com

www.barbas.com

Contents

1 Declaration of performance....5

2 About this document.... 6
2.1 How to work with this document.... 6
2.2 Warnings and cautions used in this document.... 6
2.3 Related documentation....6

3 Description....7
3.1 Overview of the front of the appliance.... 7
3.2 Intended use....7

4 Safety....9
4.1 Safety instructions for operation.... 9
4.2 Safety instructions with regard to the environment....10

5 Fuel.... 11
5.1 Fuel types.... 11
5.2 Fuel amount....11

6 Operation.... 12
6.1 Preparation before first use....12
6.2 First use of the appliance....12
6.3 Firing the appliance....13
6.3.1 First load and ignition....13
6.3.2 Reload with fuel....14
6.3.3 Control the burn process 14
6.3.4 General firing tips....16
6.4 Convection ventilator (option).... 16

7 Maintenance.... 17
7.1 Maintenance schedule....17
7.2 Remove the ashes....17
7.3 Clean the glass.... 17
7.3.1 Access to inside of door 18

8 Troubleshooting.... 21

9 Information on disposal of the appliance 23

10 Technical data.....24
10.1 Technical data 24
10.2 Product information according regulation (EU) 2015/1185.....26
10.3 Explanation of used notations on typeshield.....27

11 Warranty Terms..... 28

1 Declaration of performance

barbas bellfires.
Crafted to wonder

EU-declaration of conformity

This EC declaration of conformity applies to the product described below and describes the conformity with the following directives:
2009/125/EC Directive for the setting of eco-design requirements for energy-related products (eco-design directive)
Relevant Regulation: (EU) 2015/1185

Declaration of Performance

No. 3.129.003-5 - CPR-2013/07/01

Unique identification code of the product type:	Evolux 100-45
Intended use:	Space heating in residential buildings
Manufacturer:	Barbas Bellfires BV; Hallenstraat 17; 5531 AB Bladel; The Netherlands
System of AVCP:	3
Harmonised technical specifications:	EN 16510-2-2:2022
Notified body:	No. 2013

Essential characteristics

Mechanical resistance and stability			
Load bearing capacity	N/A		
Safety in case of fire - Protection of combustible materials	**Minimum distance to combustible materials**		
Bottom (d_B):	0 cm		
Floor in front (d_F):	60 cm		
Ceiling (d_C):	0 cm		
Rear (d_R):	0 cm		
Side (d_S):	0 cm		
Side radiation area (d_L):	150 cm		
Front (d_P):	180 cm		
Insulation material:	10 cm plates with $\lambda \leq 0.1$ W/m.K		
Hygiene, health and the environment	At nominal heat ouput	At part load heat output	
Carbon monoxide emission (CO)	1175 mg/m3	3412 mg/m3	
Nitrogen oxides emission (NO_x)	53 mg/m3	19 mg/m3	
Emission of organic gaseous carbon (OGC)	71 mg/m3	496 mg/m3	
Particulate matter emission (PM)	24 mg/m3	93 mg/m3	
Safety and accessibility in use	**Data for installation to a chimney**		
	At nominal heat output	At part load heat output	
Flue gas outlet temperature	355 °C	282 °C	
Minimum flue draught	12 Pa	6.5 Pa	
Flue gas mass flow	19.1 g/s	15.4 g/s	
Fire safety of installation to the chimney	T400 G minimum		
Energy economy and heat retention	**Appliance's thermal heat output and energy efficiency**		
	At nominal heat output	At part load heat output	
Space heat output	16 kW	7.2 kW	
Efficiency	76.0 %	67.7 %	
	Space heating efficiency		
Seasonal space heating efficiency	65.5 %		
Energy efficiency index (EEI)	100		
Energy efficiency class	A		
	At nominal heat output	At part load heat output	Standby mode
Electric power consumption	0.064 kW	0.024 kW	0 kW
Sustainable use of natural resources			
Environmental sustainability	NPD		

The performance of the product identified above is in conformity with the set of declared performances. This declaration of performance is issued, in accordance with Regulation (EU) No 305/2011, under the sole responsibility of the manufacturer identified above.

Signed for and on behalf of the manufacturer by:

Danny Baijens, CEO

Bladel, The Netherlands
01 December 2025

2 About this document

This document shows the necessary information to do these tasks on the Evolux 100-45:

- Operate the appliance
- Do basic maintenance

This document refers to the Evolux 100-45 as 'the appliance'. This document is an essential part of your appliance.Read it carefully before you do work on the appliance. Keep it in a safe place.

The original instructions of the document are in English. All other language versions of the document are translations of the original instructions.It is not always possible to provide a detailed illustration of every single item of the equipment. The illustrations in this document show a typical setup. The illustrations are for instructional use only.

2.1 How to work with this document

1. Make yourself familiar with the structure and content of the document.
2. Read the safety section in detail.
3. Make sure that you understand all the instructions.
4. Do the procedures completely and in the given sequence.

2.2 Warnings and cautions used in this document

Warning

If you do not obey these instructions, there is a risk that can cause personal injury or death.

Caution

If you do not obey these instructions, there is a risk of damage to the appliance, installation or to property.

Note

A note shows more information.

Symbol	Description
	Visual sign that there is a hazard
	Visual sign that there is a notice

2.3 Related documentation

- Installation and maintenance manual
- User manual

3 Description

3.1 Overview of the front of the appliance

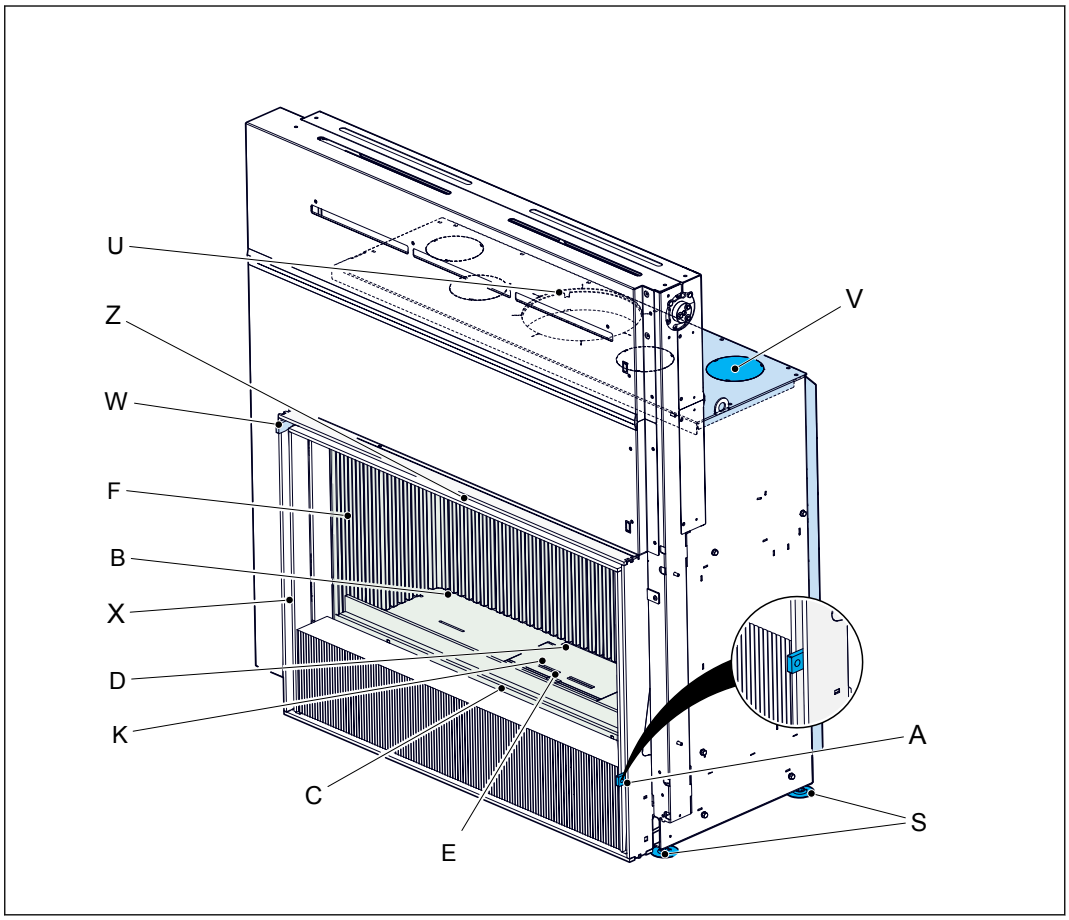

A	Door handle	S	Adjustable feet
B	Glass	U	Flue connector
C	Control lever	V	Convection air outlet
D	Grate	W	Fire screen handle
E	Ash tray	X	Frame
F	Combustion chamber panels	Z	Door lock handle
K	Primary air inlet		

3.2 Intended use

The appliance is intended for indoor use to heat the room wherein it is installed. Do not use it for other purposes.

It is not allowed to use the appliance as primary heating appliance.

The appliance is intended for use with wood logs or wood briquettes as fuel. Do not use other fuels and waste.

The appliance is intended for use with the door closed.

The appliance may only be used at the location that meets the requirements for the installation of the appliance.

The appliance is intended for intermittent use and is not intended for continuous use.

It is not allowed to connect the appliance on a shared flue gas channel.

The appliance is intended to heat the room by direct heating. It is not allowed to connect the appliance to a central-heating installation.

4 Safety

4.1 Safety instructions for operation

Warning:

- Do not put objects on the top of the appliance.
- Do not let the appliance unattended when the fuel burns.
- Do not put flammable items within 180 cm from the front of the appliance.
- Do not put flammable items within 0 cm from the side of the appliance.
- If applicable, make sure the distance between the top of the wood log storage module and the wood logs in in de storage module is minimum 10 cm. Make sure the wood logs in the storage do not touch the top of the wood log storage module.
- Do not use mineral fuel (example: coal, anthracite)
- Do not use liquid fuels.
- Do not use gasoline-type lantern fuel, kerosene, gasoline, kerosene, charcoal lighter fluid, alcohol, or similar liquids to start or re-ignite a fire in the appliance. Make sure to keep these liquids away from the appliance.
- Do not use the appliance with the door open. Smoke can escape from the appliance. Only open the appliance door for a short time to reload with fuel or to remove the ash.
- Make sure that children are supervised when they can reach the appliance.
- Make sure that there is sufficient ventilation in the room in which the appliance is installed.
- Do not use the appliance in case of visual glass damage.
- Do not use the appliance in case of damage of the door gaskets
- Make sure that the appliance is installed correctly. Refer to the Installation and Maintenance manual. You can find the manuals on *www.barbasbellfires.com*.
- The simultaneous use of an extractor fan (e.g. a cooker hood), can cause smoke escape from the appliance, when the appliance door is open.
- Wear the glove and use the operating hook or a poke when refilling the appliance
- Make sure that your clothing does not touch the appliance. Especially synthetic clothing ignites easy and burns intensely.
- Do not use the appliance when there is fog, haze or no wind.
- Do not make modifications to the appliance. Any modification will also make your warranty invalid.

Caution:

- Operation with the air control or appliance dampers open can cause excess smoke. The appliance must not be operated with air controls, appliance dampers or door left open except as directed in these instructions.
- Make sure to clean your chimney minimum every year to prevent a chimney fire.
- Do not use freshly cut wood.
- Do not use more wood per load than prescribed. Refer to section *5.2* for the recommended fuel amount.
- Do not burn waste in the appliance.
- Do not prepare food in the appliance. This causes damage to your appliance and chimney.

Note:

- Do inspect and clean the appliance, the chimney and the external combustion air supply by a Barbas dealer minimum every year.
- Do not use the appliance continuously. The intended use is as intermittent appliance.

4.2 Safety instructions with regard to the environment

- Dispose of the packing materials in an environmentally friendly way.
- Dispose of ceramic heat-resistant glass as household waste. Do not dispose of ceramic heat-resistant glass in a glass recycling container.
- Dispose of an obsolete appliance according to instructions of the authorities or the fitter.
- Obey the local regulations.

5 Fuel

5.1 Fuel types

Warning:

Do not use coal, anthracite, coal briquettes, liquid fuel or gel fuel. The appliance is not designed for these fuels. Use of these fuels is dangerous and can lead to bodily harm and to serious damage to the appliance.

Suitable fuels are:

- Hard wood (example: birch, beech, oak, ash).
- Soft wood (example: spruce, pine, poplar).
- Wood briquettes without binder.

Before use, wood must dry for minimum 2 years when freshly chopped. Kiln-dried wood must dry for an extra half year. Dried wood logs must have a moisture content of 10 - 20 %.

Unsuitable fuels are:

- Painted wood.
- Impregnated wood.
- MDF, chipboard.
- Any kind of combustible waste.
- Paraffin impregnated compressed wood logs
- Freshly chopped wood
- Coal, anthracite and other bituminous fuels
- Lignite , peat

Using unsuitable fuels cause excess smoke, black glass, combustible deposits in the chimney and can damage the appliance.

5.2 Fuel amount

Load the appliance with the amount of fuel as listed hereunder. Put the load as one layer on the floor of the combustion chamber. For the amount of fuel for the first load see chapter *6.3.1*.

Caution:

The amount of fuel specified for the nominal heat output should not be exceeded, overloading can cause excess smoke.

	Wood logs	Wood briquettes
Amount	3 pieces	5 pieces
Weight	Approximately 1.2 kg per piece	Approximately 0.8 kg per piece
Length	Approximately 30 cm	Approximately 30 cm

The above listed amount burns for approximately 45 minutes. This time can be different, dependent on the chimney draught and the position of the combustion air valve.

6 Operation

6.1 Preparation before first use

Report any defects to your dealer immediately.

1. Make sure that the appliance is not damaged.
2. Make sure that the glass is not damaged.
3. Make sure that the door opens and closes completely.
   a) Move the door handle upward to open the door.
   b) Move the door handle downward to close the door.

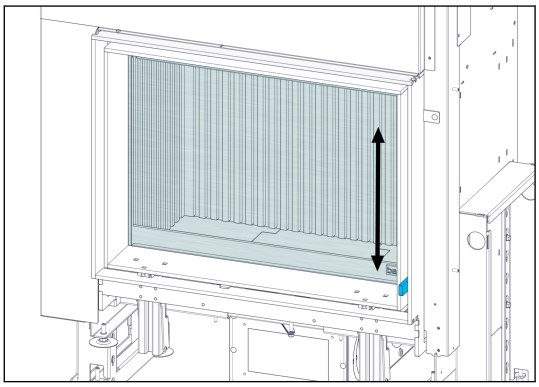

4. Make sure that the safety screen opens and closes completely.
   a) Move the safety screen handle upward to open the safety screen.
   b) Move the safety screen handle downward to close the safety screen.

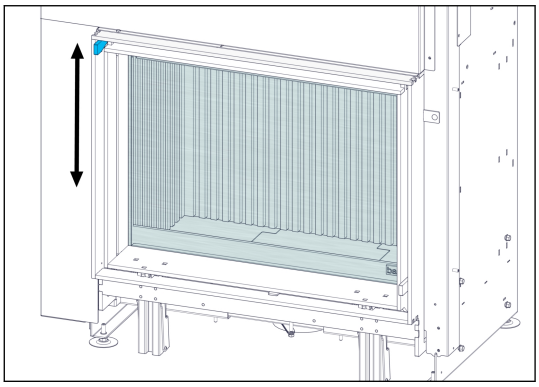

5. Remove document and components from the combustion chamber.
6. Make sure that the control lever moves easy.
7. Make sure that the ash tray is empty.
8. Make sure that the ventilation and convection inlet and outlet openings are open
9. Make sure that all package material, stickers, etc, has been removed from the vicinity of the appliance after installation.

6.2 First use of the appliance

Caution:

- Do not use the appliance for 4 weeks after installation. This time is necessary for the building materials to set.
- Make sure there is sufficient ventilation in the room in which the appliance is installed.

Note:

The appliance has a heat-resistant coating. When you use the appliance for the first time, the coating can cause an unpleasant, but harmless smell.

Before first use make sure that a newly-build chimney breast is dry. Walls that have not dried sufficiently attract particles released from your appliance when suddenly opening the door of the appliance during use.

After first few times of use of the appliance, a light deposit on the inside of the glass may occur caused by curing of the paint. This can be removed with glass cleaner or ceramic hob cleaner.

6.3 Firing the appliance

6.3.1 First load and ignition

At the beginning the appliance and chimney is cold. It is important that both the appliance and chimney reach a temperature that guarantees a good functioning of the appliance. A too low temperature results in incomplete combustion and a poor chimney draught. To avoid this do the following:

Warning:

Do not use the appliance when there is fog or haze or no wind.

1. Put the control lever in the far right position.
2. When, present, open the valve in the external combustion air supply line.
3. When present, open the chimney valve completely.
4. Open the door of the appliance.
5. Put 8 wood logs crosswise on the floor of the combustion chamber.

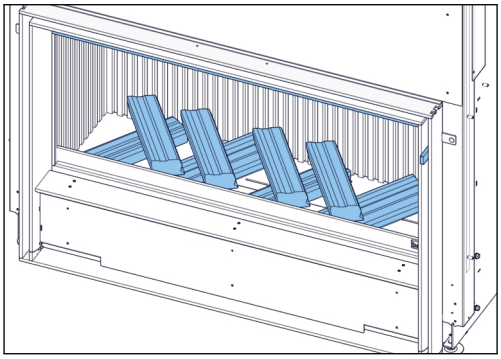

6. Put a layer of small wood logs and 2 firestarter cubes on top of the wood logs.

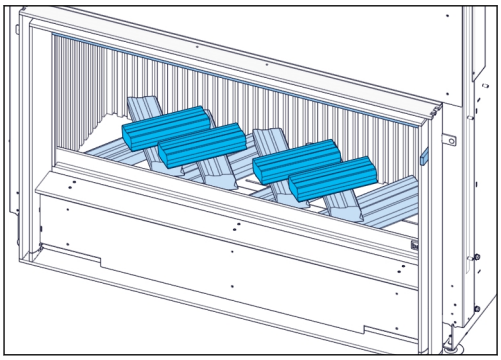

7. Put some kindling wood above the firestarter cubes.

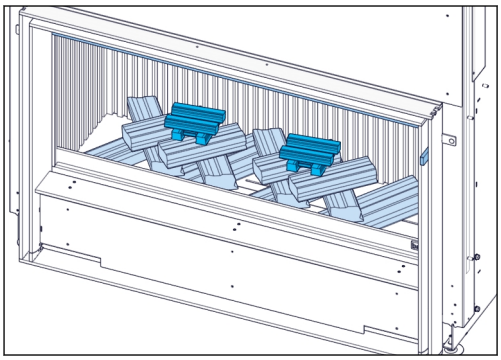

8. Light the firestarter cubes with a lighter or a match.
9. Close the door of the appliance.

After approximately 20 minutes the wood logs burn. Dependent on the quality of the chimney the wood logs burn for approximately 1 to 1.5 hours. Do not open the door of the appliance before the last flames have almost disappeared.

6.3.2 Reload with fuel

Caution:

If there is insufficient burning material in the firebed to light a new fuel charge, excessivesmoke emission can occur. Refueling must be done onto a sufficient quantity ofglowing embers and ash to make sure that the new fuel charge will ignite in a reasonable period. If thereare too few embers in the fire bed, add suitable kindling to prevent excessive smoke.

Note:

The procedure hereunder is a general description. The best reloading moment is dependent on the flue draught. A high flue draught requires reloading when the flames have completely disappeared. If the flue draught is low, reloading must be done when there are still flames.

1. Wait until the last flames have almost disappeared.
2. Set the control lever in the far right position.
3. Open the door.
4. Reload the appliance with the recommended amount of fuel. Refer to chapter *5.2*.
5. Close the door.
6. After ignition of the fuel, move the control lever to a position that gives a quiet burning fire.
7. If desired and applicable, close the safety screen.
8. If desired and applicable, start the convection ventilator.

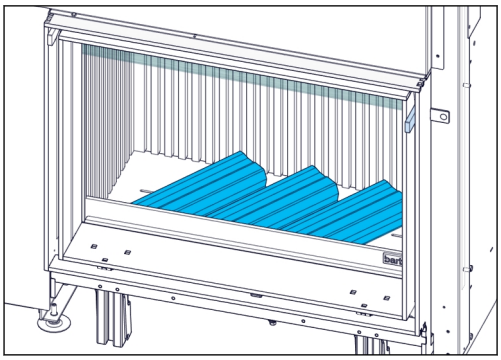

6.3.3 Control the burn process

Control the burn process with the control lever. This lever controls the amount of primary combustion air and both the secondary combustion air and airwash amount.

Warning:

Setting the control lever in the far left position (all air inlets closed) when the fuel is burning leads to excessive emission of hazardous gasses (example: carbon monoxide) and soot deposit on the glass of the door and in the chimney. Never close the air inlets when the fuel is burning. Always keep the secondary air inlet and air wash inlet open by setting the control lever somewhere in-between the center position and the far left position.

Caution:

Continuous firing with the primary air inlet fully open (control lever in the far right position) causes a white-hot fire that can damage the appliance. Use the primary air only during the first fuel load and for ignition of a new fuel load.

Control lever in the far right position: primary air inlet maximum open secondary air inlet maximum open airwash inlet maximum open	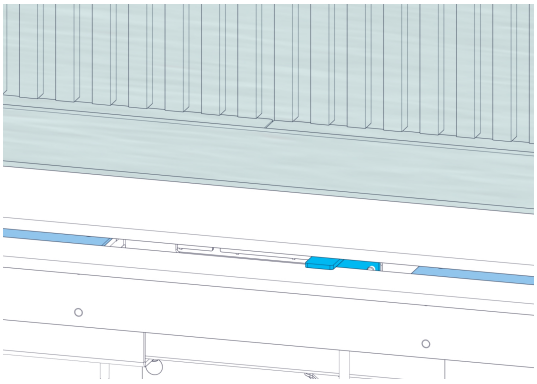
Control lever in the center position: primary air inlet is closed secondary air inlet maximum open airwash inlet maximum open	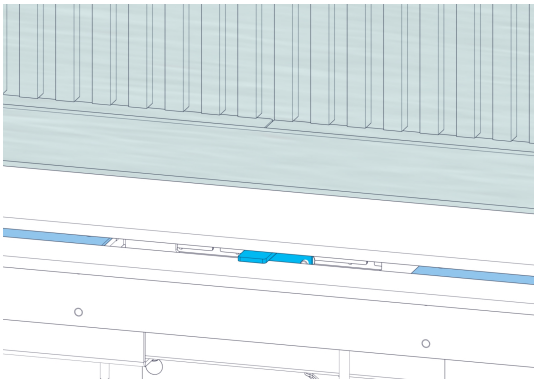
Control lever in the far left position: primary air inlet is closed secondary air inlet is closed airwash inlet is closed	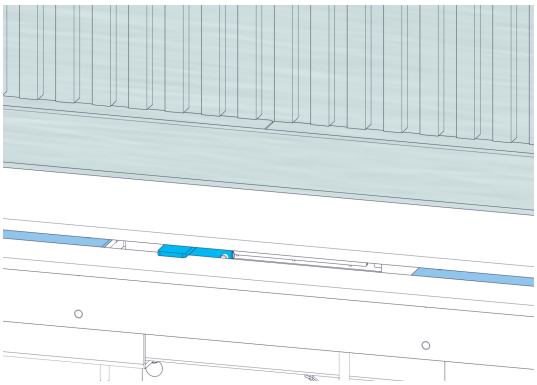

6.3.4 General firing tips

- The appliance works best when it has been heated up as described in section *6.3.1*. Insufficient heating up leads to a low chimney draught, black deposits on the glass and incomplete combustion. Good combustion is recognized by bright orange flames, invisible smoke and no soot deposits on the glass. Use the control lever to get good combustion. Refer to section *5.1* for advice on the required fuel quality.
- Make sure the door of the appliance is closed when in use. Only open the door for ignition and to refuel.
- Do not remove all the ashes. An ash layer in the combustion chamber forms a heat insulating layer, that helps the fuel to ignite easy.
- Do not set the control lever in the far left position (all combustion air inlets closed) when the appliance is used. This will cause severe smoke development, soot formation and increases the chance of a chimney fire.
- After the first load, do not overload the appliance with fuel. Refer to section *5.2* for the recommended amount of fuel. Too much fuel leads to incomplete combustion, soot formation and a chance of a chimney fire.
- When the appliance is not in use and completely cooled down, put the control lever in the far left position to close the combustion air supply.

6.4 Convection ventilator (option)

It is recommended to always use the convection ventilator when the appliance is in use.

- Start the convection ventilator by turning the dimmer knob clockwise in the ON position.
- Set the desired ventilator speed by turning the dimmer knob.
- Stop the convection ventilator by turning the dimmer knob counterclockwise into the OFF position

7 Maintenance

7.1 Maintenance schedule

Caution:

Clean the glass when it is dirty. If the glass is not cleaned when it is dirty the glass can become permanently dull.

Task	Frequency	Procedure
Remove the ashes	When necessary	Refer to section *7.2*
Clean the glass	When necessary	Refer to section *7.2*
Maintenance by your fitter	Yearly	Refer to your dealer
Chimney sweep	Yearly (or more often when necessary)	Refer to the Installation and maintenance manual
Appliance inspection	Yearly	Refer to the Installation and maintenance manual

7.2 Remove the ashes

1. Make sure that the appliance has cooled down and there are no glowing embers.
2. Remove the ashes with a small scoop.
3. Lift the grate with the operating hook and remove the grate.
4. Remove the ashtray and empty it.
5. Make sure there are no ashes in the space under the ash tray. Remove these ashes when necessary.
6. Put the ash tray back in the appliance.
7. Put the grate back in the appliance.

7.3 Clean the glass

1. Make sure the appliance has cooled down and there are no glowing embers in the combustion chamber.
2. To avoid any up swirl of ashes during cleaning, remove the ashes from the appliance.
3. Clean the glass with a soft cloth, a sponge or paper. Use glass cleaner or ceramic hob cleaner.

Note:

To access the inner side of the glass, refer to chapter *7.3.1*.

4. Make sure that the glass is dry. Water droplets can leave a mark on the glass.

Note:

Damaged or broken glass must be replaced before the appliance can be used again.

7.3.1 Access to inside of door

1. Make sure the door is closed.

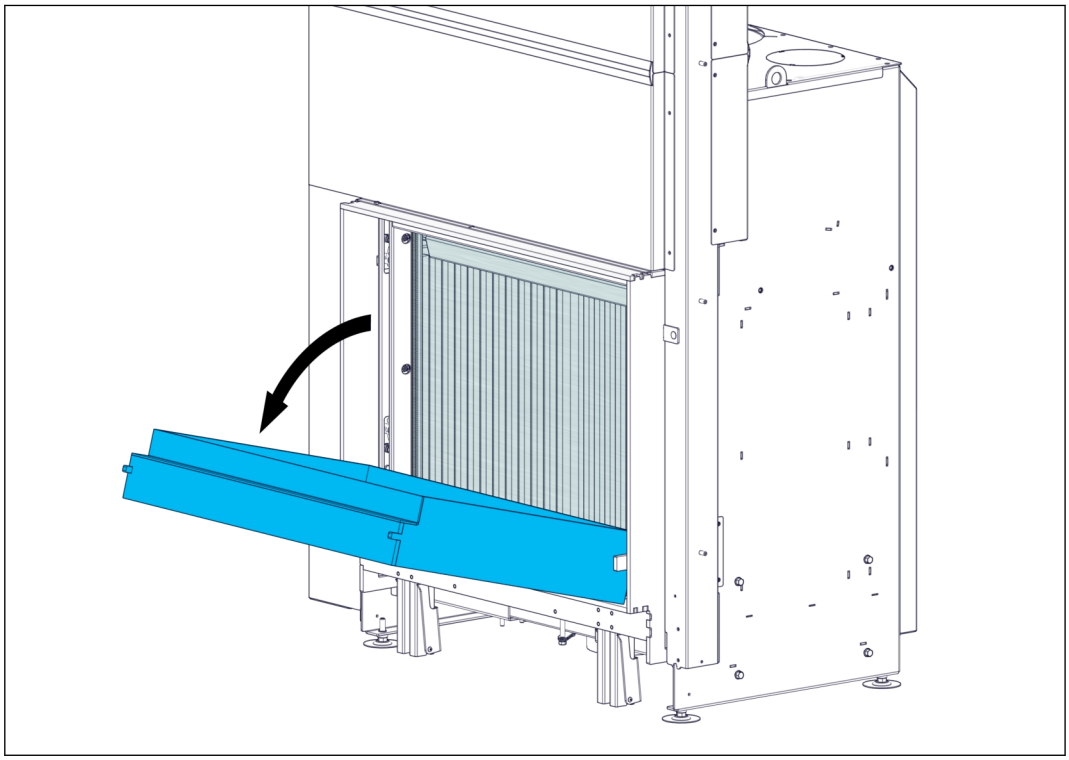

2. Rotate the frame forward.

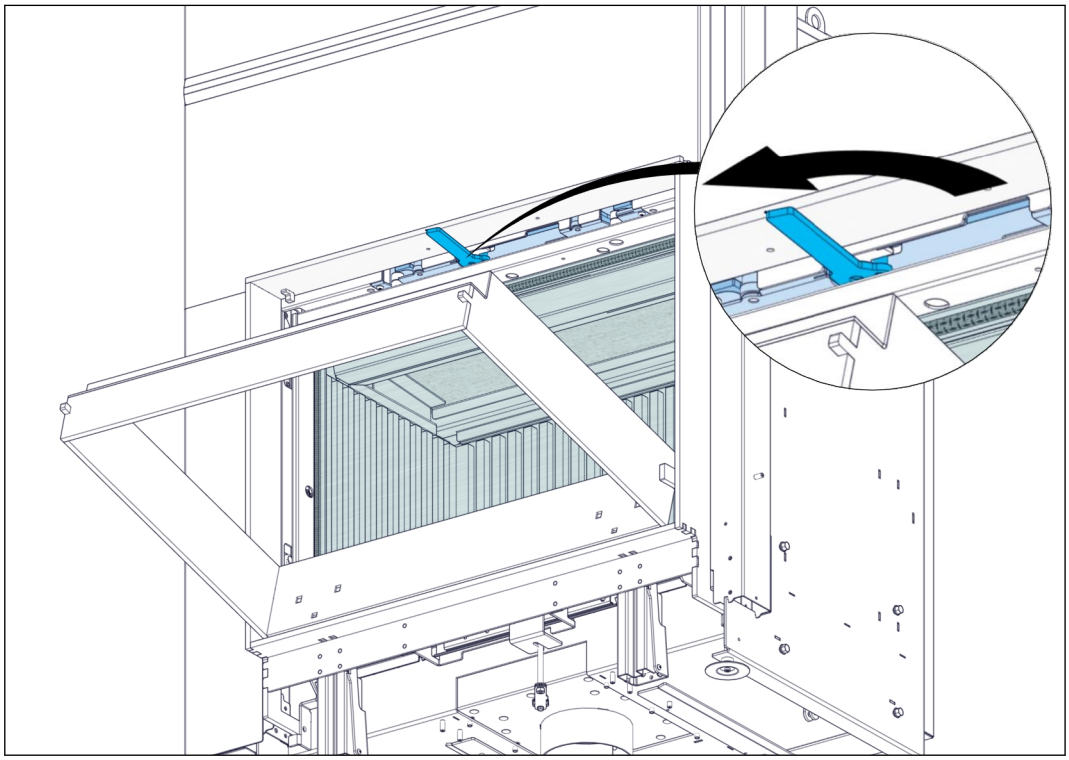

3. Rotate the door lock 90 degrees clockwise.

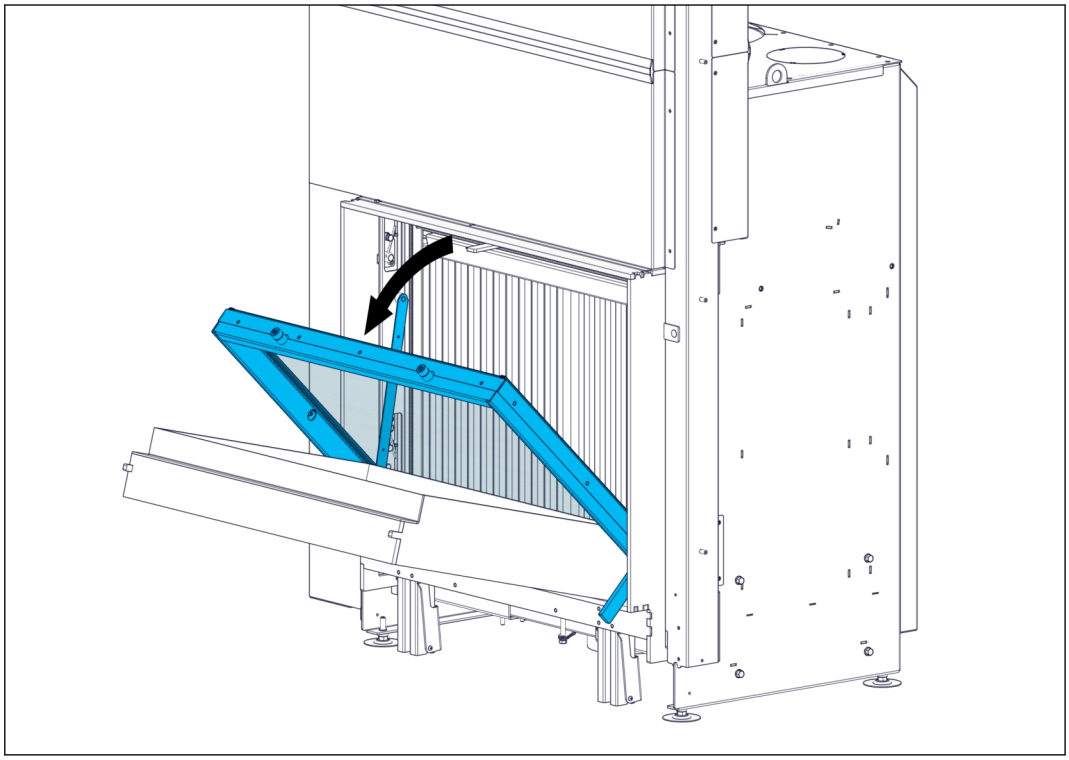

4. Rotate the door forward.
5. The inside of the door and the glass is now accessible for inspection and cleaning.
6. To close the door and frame do steps 2 to 4 in reverse order. Make sure the door lock is is locked.

8 Troubleshooting

Problem	Possible cause	Possible solution
Chimney fire (recognized by a roaring sound in the chimney)	Ignition of soot and tar deposits in the chimney.	• Set the control lever in the far left position. • Call the emergency services. (112) • Put out the fire in the appliance with sand. **Warning:** Never use water to put out the fire. • Ventilate the house. After the chimney has been extinguished, sweep the chimney and inspect for damage. Sweep the chimney minimum once a year by a certified chimney sweep.
The wood logs do not ignite	The moisture content of the wood logs is too high	• Use dried wood logs with a moisture content of 10 - 20 %. • Use wood briquettes
	The combustion chamber is not warm enough	• Do the recommended ignition procedure. Refer to section *6.3.1* . • Use the recommended amount of fuel. Refer to section *5.2*.
The wood logs burn too fast	Primary air inlet is open.	Close the primary air supply. Adjust the amount of secondary air and air wash with the control lever. Refer to section *6.3.3* .
	The chimney draught is too high	• Reduce the amount of secondary air and airwash with the control lever. Refer to section *6.3.3* • Contact your installer. .
The temperature of the room does not rise sufficient	The fuel amount is too low	Use the recommended amount of fuel. Refer to section *5.2*.
	The chimney draught is too high	Contact your installer.
Excessive smoke escapes when the door of the combustion chamber is open	The chimney draught is too low	• Do the recommended ignition procedure. Refer to section *6.3.1* . • Contact your installer.

Problem	Possible cause	Possible solution
The glass becomes black	The combustion chamber is not hot enough	• Use the recommended amount of fuel. Refer to section *5.2*. • Increase the amount of combustion air with the control lever. Refer to section *6.3.3*.
	The moisture content of the wood logs is too high	• Use dried wood logs with a moisture content of 10 - 20 %. • Use wood briquettes
	The seal around the door is damaged	Contact your dealer.
The convection ventilator makes unusual noise	The convection ventilator is defect	Contact your dealer
The convection air outlets show a grey discoloration	Household particles (for example from pets, clothing, cigarettes, candles) flow via the convection air inlet alongside the hot appliance. The particles burn when in contact with the hot appliance. The residual black particles flow via the convection air outlet to the room.	• Make sure that you daily clean the surround of the convection air inlet. • Remove the air inlet and air outlet grates and clean the grates. Put the grates back after cleaning. • Make sure the room is sufficient ventilated • Avoid as much as possible the presence of household particles. It is recommended to use a vacuum cleaner every day.

9 Information on disposal of the appliance

- Dispose of an obsolete appliance according to instructions of the authorities or the installer.
- The information in this section is informative. Always obey the national and local regulations on recycling and disposal of the appliance or parts of the appliance.
- Before disassembly and disposal of the appliance, remove ashes and unburnt fuel from the appliance. Dispose ashes as rest waste. Do not dispose ashes as organic waste.

Appliance component	Material	Disassembly	Recycling / Disposal
Combustion chamber (walls)	Cast iron	Refer to the Installation Manual	Dispose as metal waste
Combustion chamber (walls and baffle)	Vermiculite	Refer to the Installation Manual	Vermiculite in contact with combustion gasses cannot be re-used or recycled. Dispose as rest waste.
Combustion chamber (walls and baffle)	Heat resistant ceramic	Refer to the Installation Manual	Ceramic in contact with combustion gasses cannot be re-used or recycled. Dispose as rest waste.
Combustion chamber (grate and bottom)	Steel	Refer to the Installation Manual	Dispose as metal waste
Combustion chamber (baffle)	Heat shield	Refer to the Installation Manual	Dispose as metal waste
Glass	Ceramic glass	Remove glass holder with suitable tools. Remove gaskets and cord from the glass	Dispose as rest waste or ceramic waste. Do not dispose as glass waste.
Ventilator	Electronics	Remove from convection air inlet box with suitable tools.	Dispose as electronic waste
Appliance body	Steel	Make sure to remove all components other than metal	Dispose as metal waste
Ash tray	Steel	Remove from appliance	Dispose as metal waste
Combustion air inlet box	Steel	Remove from appliance	Dispose as metal waste
Convection air / combustion air inlet box	Steel	Remove from appliance.	Dispose as metal waste
Insulating plates used for the fireplace	Calcium silicate	Remove from appliance .	Dispose as building construction waste (stone)
Gaskets	Glass fibre cord or plates	Remove from appliance and components	Dispose as glass fibre (non-flammable waste)

10 Technical data

10.1 Technical data

Name	Barbas	
Model	Evolux 100-45	
EPREL registration number	257907	
Tested in accordance with	EN16510-2-2	
Energy efficiency index	100	
Energy efficiency class	A	
Fuel	Wood logs, Wood briquettes	
Indirect heating function	No	
Room sealed	Yes	
Leak rate at 10 Pa	2.7 m^3/h	
Seasonal efficiency	66 %	
	Nominal load	**Part load heat output**
Fuel load	3.5 kg	1.9 kg
Nominal heat output (net)	16.0 kW	7.2 kW
Useful efficiency	76.0 %	67.7 %
• carbon monoxide (CO) emssion	1175 mg/Nm^3	3412 mg/Nm^3
• particles (PM) emission	24 mg/Nm^3	93 mg/Nm^3
• organic gaseous compounds (OGC) emission	71 mg/Nm^3	496 mg/Nm^3
• nitrogen oxides (NO_x) emission	53 mg/Nm^3	19 mg/Nm^3
Flue gas mass flow	19.1 g/s	15.4 g/s
Flue gas outlet temperature	355 °C	282 °C
Flue gas temperature	296 °C	235 °C
Minimum chimney draught	12 Pa	6.5 Pa
Minimum temperature class of the chimney	T 400	
Flue gas connection	Outer diameter 248 mm, suitable for a pipe with an inner diameter of 250 mm	
External combustion air connection	125 mm	
Minimum distance to flammable materials	Refer to the installation and maintenance manual	
Weight		

	Vermiculite interior	Concrete interior	Cast iron interior
Basic appliance	265 kg	283 kg	315 kg
Basic appliance with all available options	305 kg	323 kg	355 kg
Used materials			
	Vermiculite interior	**Concrete interior**	**Cast iron interior**
Combustion chamber side and back panels	Vermiculite 750 kg/m^3	Heat resistant ceramic 1600 kg/m^3	Cast iron
Combustion floor and grate	Steel	Steel	Steel
Lower baffle	Vermiculite 750 kg/m^3	Heat resistant ceramic 2000 kg/m^3	Vermiculite 750 kg/m^3
Upper baffle	Vermiculite 750 kg/m^3	Vermiculite 750 kg/m^3	Vermiculite 750 kg/m^3
Front glass	Heat resistant ceramic glass	Heat resistant ceramic glass	Heat resistant ceramic glass
The specific precautions that shall be taken when the local space heater is assembled, installed or maintained, are listed in the attached documents:	Installation and maintenance manual User manual		
Maximum capacity to carry a chimney	120 kg *)		

Additional information in order to achieve relevant test results for market surveillance	
Mass of basic fire bed	120 g
Criterion for the end of the test cycle	5 vol% CO_2

*) if the weight of the chimney or part of the chimney, being carried by the appliance, is more than indicated, the chimney must be supported with a wall bracket.

10.2 Product information according regulation (EU) 2015/1185

Model identifier	*Evolux 100-45*
Equivalent models	*N.A.*
Indirect heating function	*No*
Direct heat output	*16 kW*
Indirect heat output	*- kW*

Fuel	Preferred fuel (only one)	Other suitable fuel(s)	Emissions at nominal heat output (*) [mg/Nm^3 (13 % O_2)]				Emissions at minimum heat output (*)(**) [mg/Nm^3 (13 % O_2)]			
			PM	OGC	CO	NO_x	PM	OGC	CO	NO_x
Wood logs, moisture content < 25 %	*yes*	*no*	*24*	*71*	*1175*	*53*	*93*	*496*	*3412*	*19*
Compressed wood, moisture content < 12 %	*no*	*no*								
Other woody biomass	*no*	*no*								
Non-woody biomass	*no*	*no*								
Anthracite and dry steam coal	*no*	*no*								
Hard coke	*no*	*no*								
Low temperature coke	*no*	*no*								
Bituminous coal	*no*	*no*								
Lignite briquettes	*no*	*no*								
Peat briquettes	*no*	*no*								
Blended fossil fuel briquettes	*no*	*no*								
Other fossil fuel	*no*	*no*								
Blended biomass and fossil fuel briquettes	*no*	*no*								
Other blend of biomass and solid fuel	*no*	*no*								

Characteristics when operating with the preferred fuel	
Seasonal space heating efficiency η_s [%]	*66*
Energy efficiency index (EEI)	*100*

Item	Symbol	Value	Unit	Item	Symbol	Value	Unit
Heat output				**Useful efficiency (NCV as received)**			
Nominal heat output	P_{nom}	*16.0*	kW	Useful efficiency at nominal heat output	$\eta_{th,nom}$	*76.0*	%
Minimum heat output (indicative)	P_{min}	*7.2*	kW	Useful efficiency at minimum heat output (indicative)	$\eta_{th,min}$	*67.7*	%

Auxilliary power consumption				**Type of heat output/room temperature control (select one)**	
At nominal heat output	el_{max}	*0.064*	kW	Single-stage heat output, no room temperature control	*yes*
At minimum heat output	el_{min}	*0.024*	kW	Two or more manual stages, no room temperature control	*no*
In standby mode	el_{SB}	*0*	kW	With mechanic thermostat room temperature control	*no*
Permanent pilot flame power requirement				With electronic room temperature control	*no*
Pilot flame power requirement (if applicable)	P_{pilot}	*N.A.*	kW	With electronic room temperature control plus day timer	*no*
				With electronic room temperature control plus week timer	*no*
				Other control options (multiple selection possible)	
				Room temperature control, with presence detection	*no*
				Room temperature control, with open window detection	*no*
				With distance control option	*no*

Contact details	*Barbas Bellfires BV* *Hallenstraat 17* *5531 AB BLADEL* *The Netherlands*	*www.barbas.com*

(*) PM = particulate matter, OGC = organic gaseous compounds, CO = carbon monoxide, NOx = nitrogen oxides
(**) Only required if correction factors F(2) or F(3) are applied.

Signed for and on behalf of the manufacturer by:
Danny Baijens, CEO

Bladel; 26 November 2025

10.3 Explanation of used notations on typeshield

Notation	Description
m_{chim}	The maximum weight of a chimney the appliance may carry
d_B	The minimum distances below the bottom to combustible material
d_F	The minimum distances from the front to combustible material in the bottom front radiation area
d_C	The minimum distances from the top to combustible material
d_R	The minimum distances from the rear to combustible material
d_S	The minimum distances from the sides to combustible material
d_L	The minimum distances from the front to combustible material in the side front radiation area
d_P	The minimum distances from the front to combustible material
CO_{nom}	Carbon monoxide emission at nominal heat output
NO_{xnom}	Nitrogen oxide emission at nominal heat output
OGC_{nom}	Hydrocarbons emission at nominal heat output
PM_{nom}	Particleemission at nominal heat output
CO_{part}	Carbon monoxide emission at part load heat output
NO_{xpart}	Nitrogen oxide emission at part load heat output
OGC_{part}	Hydrocarbons emission at part load heat output
PM_{part}	Particle emission at part load output
T_{snom}	The flue gas outlet temperature at nominal heat output
p_{nom}	Minimum flue draught at nominal heat output
$\Phi_{f,g\ nom}$	The flue gas mass flow at nominal heat output
T_{spart}	The flue gas outlet temperature at part load heat output
p_{part}	Minimum flue draught at part load heat output
$\Phi_{f,g\ part}$	The flue gas mass flow at part load heat output
T_{class}	Temperature designation of the chimney
P_{nom}	The nominal heat output
η_{nom}	The appliance efficiency at nominal heat output
P_{part}	The part load heat output
η_{part}	The appliance efficiency at part load heat output
η_s	The appliance seasonal space heating efficiency at nominal heat output
EEI	The energy efficiency index
E_{class}	The energy efficiency class
INT	The appliance is capable of intermittent operation
CM	Room-sealed appliance with a manually closed and locked door
B	Non-room-sealed appliance
	Read and follow the user operating instructions

11 Warranty Terms

To make a claim under the warranty, it is important to register the Barbas appliance after purchase via www.barbas.com.

Barbas Warranty Terms

Barbas B.V. guarantees the quality of the supplied Barbas appliance and the quality of the materials used. All Barbas appliances are developed and manufactured according to the highest possible quality standards. If, despite all this, something should prove amiss with the Barbas appliance you have purchased, Barbas B.V. offers the following manufacturer's warranty.

Article 1: Warranty

1. If Barbas B.V. determines that the Barbas appliance you have purchased is defective as a result of a flaw in the construction or material, Barbas B.V.guarantees to repair or replace the appliance free of charge, without charging any costs for labor or spare parts.
2. Repair or replacement of the Barbas appliance will be undertaken by Barbas B.V.or by a Barbas dealer as designated by Barbas B.V.
3. This warranty is supplementary to the existing legal national warranty of Barbas dealers and Barbas B.V. in the country of purchase and is not intended to restrict your rights and claims based on the applicable legal provisions.

Article 2: Warranty conditions

1. Should you wish to claim under the warranty, please contact your Barbas dealer.
2. Complaints should be reported as quickly as possible after they have manifested themselves.
3. Complaints will only be accepted if they are reported to the Barbas dealer,together with the serial number of the Barbas appliance which is stated on the enclosed documents.
4. In addition, the original receipt (invoice, receipt, cash receipt) showing the date of purchase must also be submitted.
5. Repairs and replacements during the warranty period do not give any entitlement to an extension of the warranty period. After a repair or replacement of warranty parts, the warranty period shall be deemed to have started on the date of purchasing the Barbas appliance.
6. If a certain part is eligible for the warranty and the original part is no longer available, Barbas B.V. shall ensure that an alternative part of at least the same quality shall be provided.

Article 3: Warranty exclusions

1. The warranty on the Barbas appliance ceases to be in effect if:
   a. it is not installed according to the installation instructions, and to national and/or local regulations;
   b. it has been installed, connected or repaired by a non-Barbas dealer;
   c. it has not be used or maintained according to the instructions for use;

   d. it has been changed, neglected or roughly treated;
   e. it has been damaged as a result of external causes (outside the appliance itself), for example, lightning strike, water damage or fire;
2. In addition, the warranty lapses if the original purchase receipt shows any change, deletion, removal or if it is illegible.

Article 4: Warranty area

1. The warranty is only valid in those countries where Barbas appliances are sold through an official dealer network.

Article 5: Warranty period

1. This warranty will only be granted during the warranty period.
2. The body of the Barbas appliance is guaranteed for a period of 10 years against construction and/or material faults, starting from the moment of purchase.
3. For other parts of the Barbas appliance, a similar warranty applies from the moment of purchase for a period of two years.
4. For user parts such as glass, glass sealing cord and the interior of the combustion chamber, a similar guarantee is given until after the first burning.

Article 6: Liability

1. A claim granted by Barbas B.V. under this warranty does not automatically imply that Barbas B.V. also accepts liability for any possible damage.The liability of Barbas B.V. never extends further than that stated in these warranty conditions. Any liability of Barbas B.V. for consequential damage is expressly excluded.
2. That stated in this provision is not valid if and to the extent that is derives from a mandatory provision.
3. All agreements entered into by Barbas B.V. are, unless specifically stated otherwise in writing and to the extent that they are permitted based on applicable law, subject to the FME-CWM general sales and delivery conditions for the technology industry.

Barbas B.V.

Hallenstraat 17

5531 AB Bladel

The Netherlands

Email: info@Barbas.com

Carefully retain the enclosed documents; they show the serial number of the appliance.You will need this if you wish to claim under the warranty.

barbas.

Your Barbas dealer

08.01.2026 - 355480 - 134-006